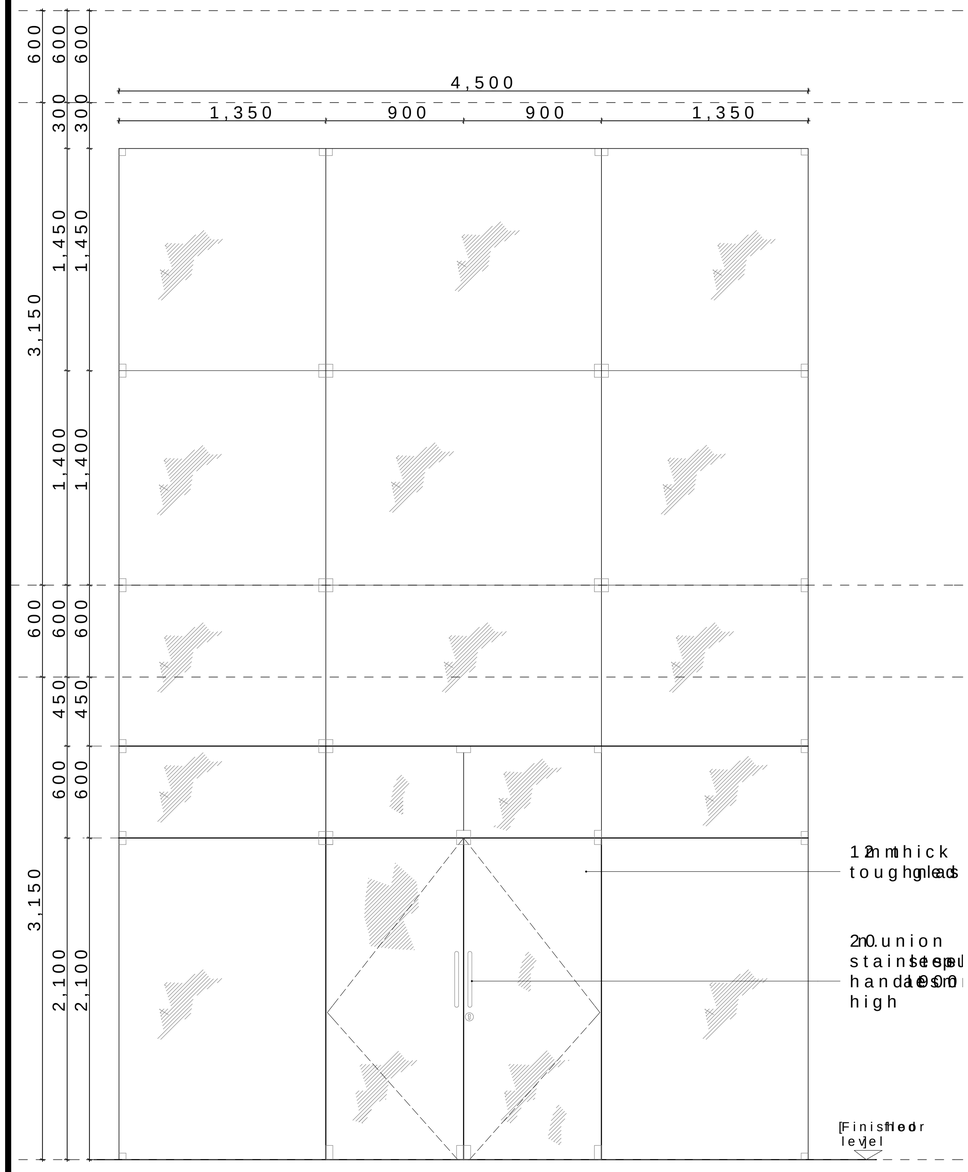

D01 C[3]01
Location: Main Entrances

Material: 12mm toughened glass with 1000mm x 500mm aluminium edge plates

Qty: 1no

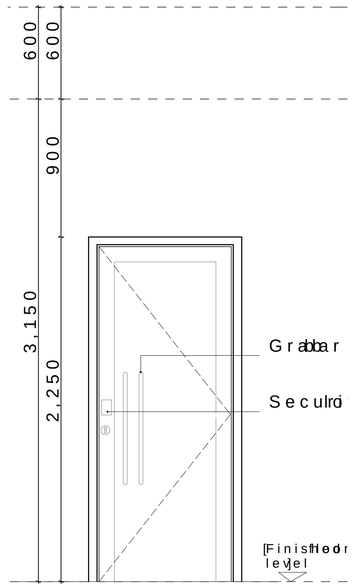

D02 C[3]02
Location: Storm room gym

Material: Specified by the manufacturer specification

Qty: 4no

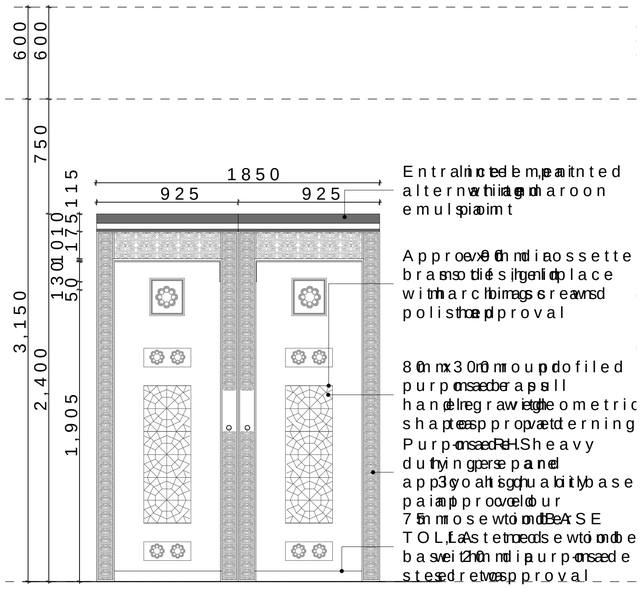

D04 C[3]04
Location: Side entrance

7.5mm wide louvered doors with 7.5mm wide wooden door frame to match door finishes approved
9.0mm wide aluminium glass sliding door with matching door frame finished in gold approval
12mm thick toughened glass door with matching door frame finished in gold approval
50mm diameter tempered glass door stop (Ref catalogue E-S6)7

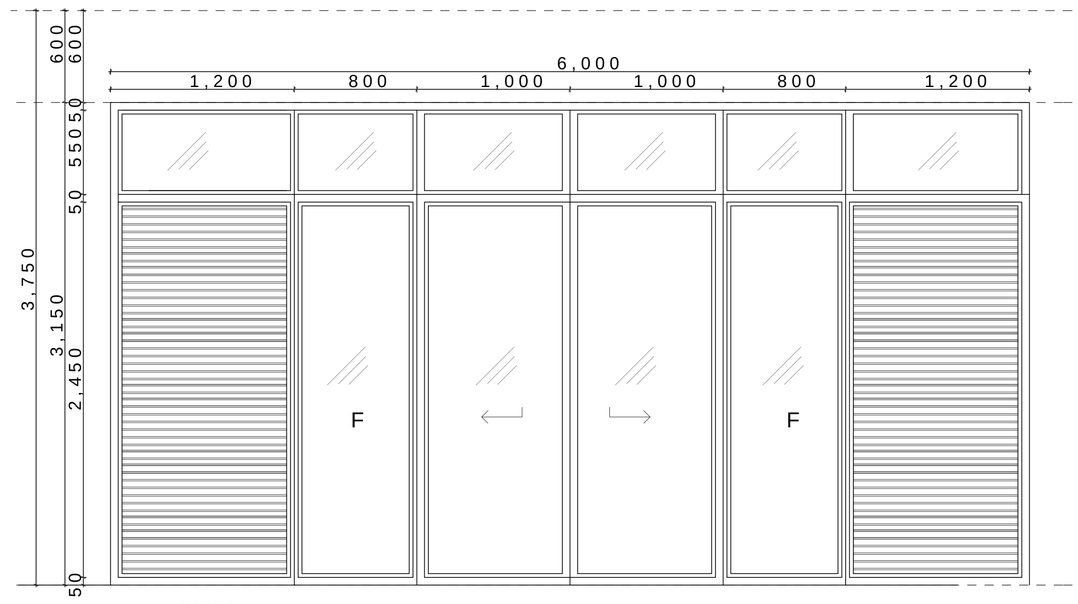

D03 C[3]03
Location: Safety pious store

Material: 12mm thick tempered toughened glass 7.5x7.5mm aluminium pivoting door with tinted effect to match frame, with side louvered aluminium with the same finish
Sliding door

Qty: 1no

NOTES
GENERAL
1. Drawings not to scale. Only figured dimensions to be used
2. All dimensions are shown in millimetres unless otherwise stated
3. P.V. denotes pressure movement
CIVIL WORKS
1. All slabs to be poured on top of 150mm hardcore blinding. 567 mm concrete ready mix 6010 mm hardcore (compressed gravel base)
2. All soil is to be treated before and after termite control
3. All soil is to be compacted back to be stable. The soil pressure not to exceed natural ground pressure
STRUCTURAL WORKS
1. Depth of foundation to be determined by the S.E's approval
2. For all Concrete grade refer to structural drawings and details
3. All adjacent Concrete grade refer to structural drawings and details with structural provision have to be very
4. All walls less than 200mm thick to be reinforced with provision have very alternative use
MECHANICAL
1. All plumbing and drainage to be in compliance with Municipal Council specification
2. All service duct to be access from balcony floors
3. SVP vents are visible and to be approved after the roof drainage
4. Drainage systems generally to be in galvanised steel with a minimum 150mm concrete surround
5. All underground foul water drainage pipes are class 4 gold to be approved pipe
6. Minimum comprehensive ratio of 1%
7. All mechanical work to be coordinated with electrical and other consultants clarification before work begins
ELECTRICAL
1. All conduits shall be laid before plastering

FINISHES SCHEDULE
1. FLOOR FINISHES
a. 200mm thick granite slabs (refer to details and specifications) laid
to falls with rubber finish
b. 6mm thick polished sheet of alazaid limestone or acceptable, with 253mm individual strips subject to architect approval
Total floor slab thickness 200mm
c. 400mm x 400mm granite tiles 14mm or marble or kaid limestone or tar screed
Total floor slab thickness 200mm
d. 300x300x10mm thick glass ceramic tiles
e. Approx 200x600x20mm thick granite or tile finishing approved to be laid with the screed 14mm screed
f. 20mm thick and durable zero stone or limestone screed
g. 40mm screed only finish
2. WALL FINISHES
a. 12mm thick cement plaster and screed with paint or texture finishing mix tu
Coat applied and manufacturer specifications
b. Moulded each to gypsum board or plaster to overall 1100x900mm from finished floor level
c. Exposed and decorative stone
d. 300mm x 300mm x 20mm thick glass ceramic tiles 200mm wide with 100mm straight joint joints to be in the direction of the stand the sole invented background without approval
e. Corian panels after removing containing grey (2ec3 coats)
f. Emulsion paint
g. Moulded each to gypsum board 1200mm high
3. SKIRTING FINISHES
a. 300mm x 100mm thick ceramic tiles
b. 10mm limestone or bar 25mm thick limestone or sand screed
c. 150mm high polished marble terrazzo
d. exterior 150mm x 25mm thick wooden moulding on wall
e. 100mm x 25mm wooden skirting tiles
f. Random cut and stacked zero stone
4. CEILING FINISH
a. 9mm thick gypsum board ceiling 3mm second coat of plaster, ter smooth to be wed hetd ucts usual
b. Painted weather proof finish
c. Mahogany with T&G
d. Emulsion paint
e. 25mm thick suspended ceiling board and plaster soffit
f. Square cut hanging (top or bottom) plaster board ceiling with fill

REVISIONS

LEGEND
FLOOR FINISH
WALL FINISH
SKIRTING FINISH
CEILING FINISH
WINDOW W-01 — FLOOR LEVEL, WINDOW TYPE
ROOM 00.08 — FLOOR LEVEL, ROOM NUMBER
DOOR 01-D01 — FLOOR LEVEL, DOOR TYPE

PROJECT TITLE	PROPOSED ADDITIONAL COURT SERVICE TERMINAL INFORMATION CENTRE
JOB NUMBER	P/0406/2016
DRAWING TITLE	DOOR SCHEDULES
DRAWING NO	C(-01)
DRAWN BY	KAMAU WANJIKU
DATE	7TH MARCH 2016
DRAWING STATUS	REWORK DRAWINGS
PAPER SIZE	A1
SCALE	1:100
SHEET NO:	1

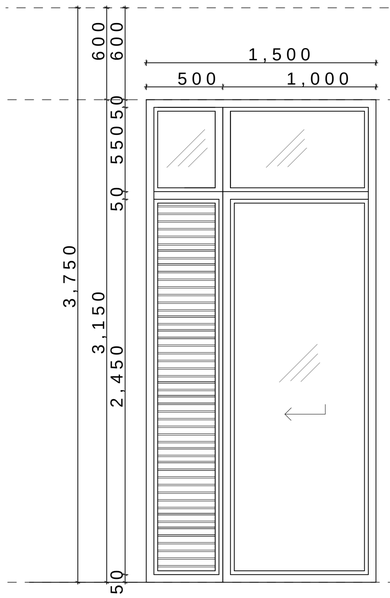

D05 C[3]05

Location: Hotel rooms

Material: 12mm thick textured rough glass set in a 75x75mm aluminium powder coated effect metal finish frame, with side UV resistant aluminium with the same finish
Sliding door

Qty: 2no

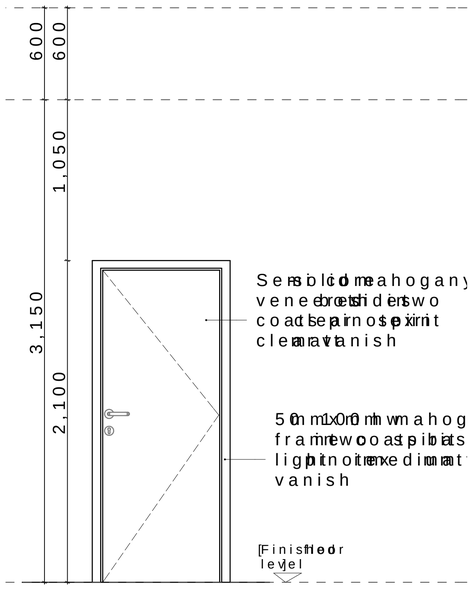

D06 C[3]06

Location: Entrance Waiting area, hallways, offices

Material: Solid core flush door mahogany veneered both sides

Qty: 44no

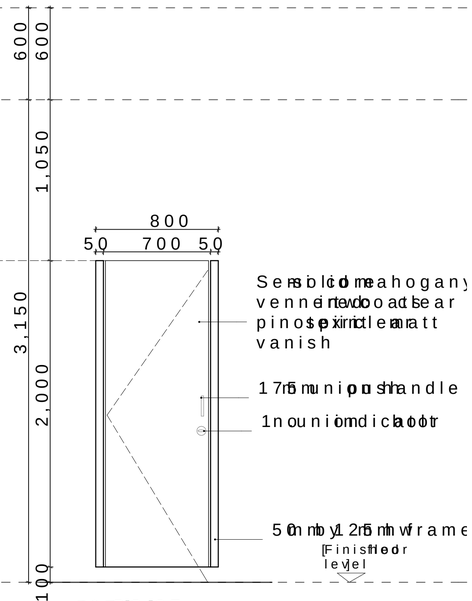

D07 C[3]07

Location: Toilets floors

Material: Sensio lock core flush door mahogany veneered both sides

Qty: 29no

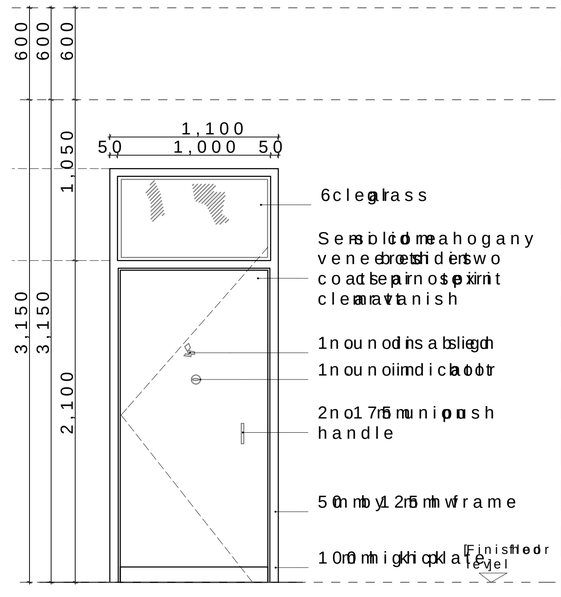

D08 C[3]08

Location: Offices and Toilet floors

Material: Sensio lock core flush door mahogany veneered both sides

Qty: 3no

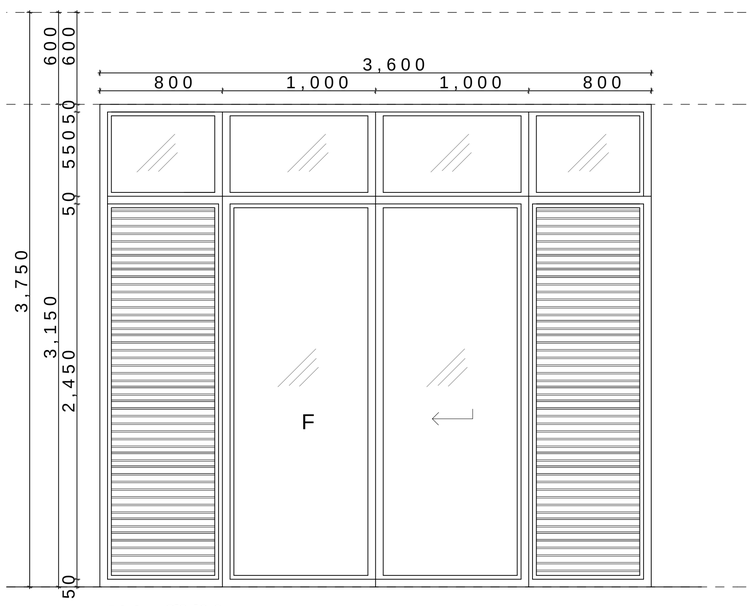

D09 C[3]09

Location: Chafe

Material: 12mm thick textured rough glass set in a 75x75mm aluminium powder coated effect metal finish frame, with side UV resistant aluminium with the same finish
Sliding door

Qty: 1no

D10 C[3]10

Location: Hotel lobby, main corridors, offices, ops

Material: 12mm thick textured rough glass set in a 75x75mm aluminium powder coated effect metal finish frame, with side UV resistant aluminium with the same finish
Sliding door

Qty: 14no

NOTES

GENERAL

1. Drawings not to be scaled. Only figured dimensions to be used
2. All dimensions are shown in millimeters unless otherwise stated
3. P.V. denotes pressure vent

CIVIL WORKS

1. All slabs to be poured on a 1000gauge polythene membrane blinding 50/75mm concrete and reinforced 610x610mm hard core material as specified
2. All soil is to be treated to create a termite control
3. All soil is to be cut and bark mulched as stability. The soil is to be not exceed natural angle of repose

STRUCTURAL WORKS

1. Depth of foundation and dimensions to be determined by SE's approval
2. For all Concrete and reinforcement refer to Structural Engineer details
3. All adjustments Concrete and reinforcement has to always be checked with structural engineer prior to any work
4. All walls less than 200mm thick to be reinforced with brick work prior to any alternative use

MECHANICAL

1. All plumbing and drainage to be in compliance with Cape Town specification
2. All service ducts to be accessible for all floors
3. SVP vents to be visible and provided at the end of drainage
4. Drainage systems to be elevated and damp seal with at least 150mm concrete surround
5. All underground water and waste pipes to be class 4 gold or brown pipe
6. Minimum compression ratio of 1%
7. All mechanical work to be coordinated with electrical and civil engineers on flow sheets clarifications before work begins

ELECTRICAL

1. All conduits to be laid before plastering

FINISHES SCHEDULE

1. FLOOR FINISHES

a. 200mm thick screed reinforced with SE details as well as hardener laid to final finish
b. 6mm thick polished screed and screed on screed 50mm thick, pvs with 25mm individual tiles specified on architect approval
Total floor screed thickness 200mm
c. 400mm x 400mm x 8mm granite tiles set in 4mm thick kaizer screed on screed
Total floor screed thickness 200mm
d. 300x300x10mm thick kaizer screed tiles
e. Approx 200x600x12mm mahogany tile to match existing approved tender and with the same 20mm x 14mm screed screed
f. 20mm thick concrete screed to screed
g. 4mm screed on screed finish

2. WALL FINISHES

a. 12mm thick cement screed on trimpela stucco and trimpela stucco and paint to match existing mix tu Coat application manufacturer specifications
b. Moulded architrave to match existing architrave to all 1100x200mm from finished level
c. Exposed concrete to remain
d. 300mm x 300mm x 20mm thick kaizer screed tiles 200mm high with 100mm straight cut to match existing joints so that the rectification work shall be seamless and the finished background without any approval
e. Coral trimpela stucco containing grey pigment (2 coats)
f. Emulsion paint
g. Moulded architrave to match existing architrave 1200mm high

3. SKIRTING FINISHES

a. 300mm x 300mm thick kaizer tiles
b. 100mm limestone bar 25mm thick limestone screed
c. 150mm high polished limestone terrazzo
d. 150mm x 25mm thick to match existing wall
e. 100mm x 25mm wide resin coated tiles
f. Random cut and stacked kaizer stacks

4. CEILING FINISH

a. 9mm thick gypsum board ceiling screed 20mm screed to accommodate trimpela stucco and to be fixed to structural slab
b. Paint weather proof to be applied to finish
c. Mahogany timber T&G
d. Emulsion paint
e. 25mm thick lusper gypsum board and trimpela stucco eaves soffit
f. Square cut angle to be provided to match existing and to be filled

REVISIONS

LEGEND

FLOOR FINISH
WALL FINISH
SKIRTING FINISH
CEILING FINISH

WINDOW W-01 — FLOOR LEVEL, WINDOW TYPE
ROOM 00.08 — FLOOR LEVEL, ROOM NUMBER
DOOR D-01 — FLOOR LEVEL, DOOR TYPE

PROJECT TITLE	PROPOSED NEW BRIDGE COURT TERMINAL INFORMATION CENTRE
JOB NUMBER	PM 04062016
DRAWING TITLE	DOOR SCHEDULES
DRAWING NO	C(-)02
DRAWN BY	KAMANDA NDITWA NJIKU
DATE	7TH MARCH 2016
DRAWING STATUS	REWORK DRAWINGS
PAPER SIZE	A1
SCALE	1:100
SHEET NO:	1

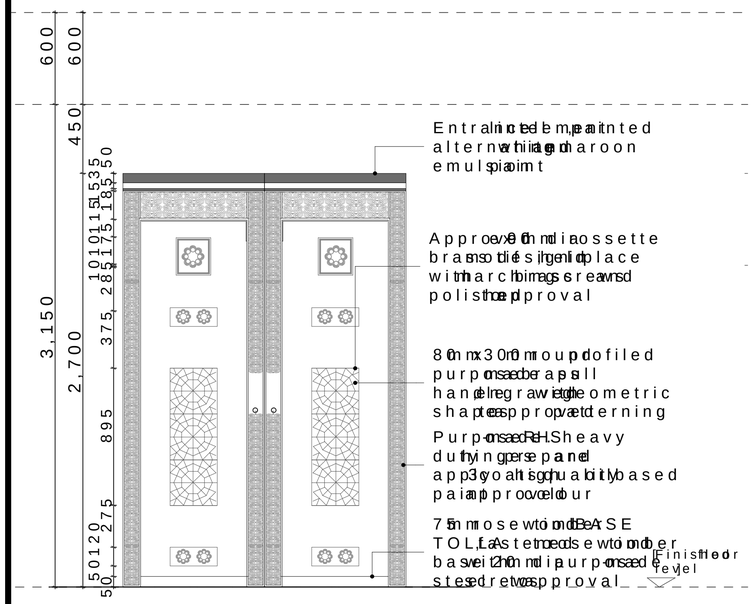

D18 C[3]18

Location Annuncio vibuanalphotograsatpoliyo

75 mm wide double folding sliding wood moulded door with 75 mm rose wood moulded character weight approved standard pattern approved colour 50 mm wide brass sugar circular handle approved 900 mm wide cassette brass sockets flush in place with marble images screwed polished finish and stainless steel rose wood moulded door frame 800 mm x 12 mm heavy duty rose wood moulded door frame engraving weight approved colour pattern approved colour 1 1/2 No pair Purpose made hinges to be hinged weight 1 1/2 No pair Purpose made hinges to be hinged weight Escutcheon plate metal Nolues 180 cylinder 50 mm diameter temporary door furniture (Escutcheon plate metal Nolues E-S 6)7 1 No door closer stop (Eslicetal Nolues E-S 6)7

Qty 2 no

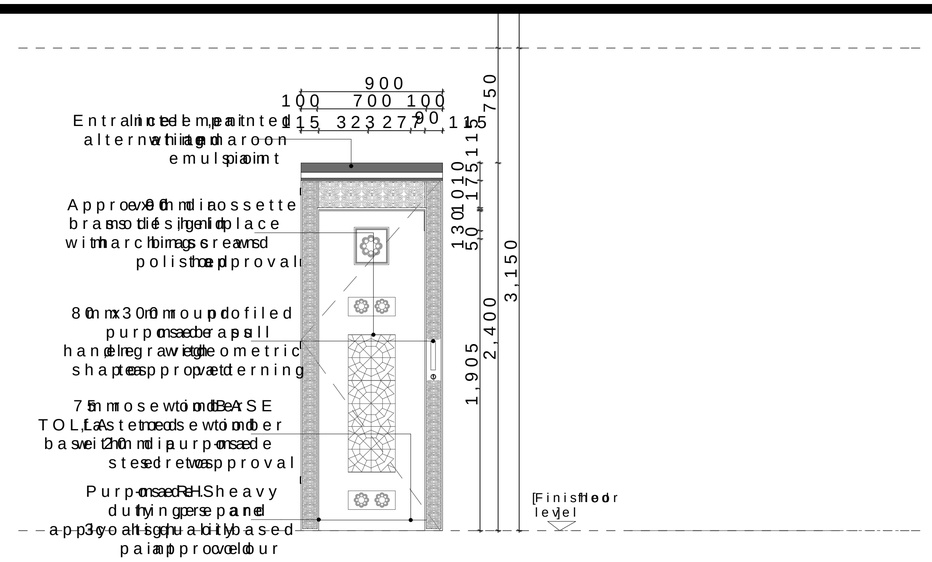

D19 C[3]19

Location Ante room

Material 75 mm Single leaf folding sliding wood moulded door with 75 mm rose wood moulded character weight approved standard pattern approved colour 50 mm wide brass sugar circular handle approved 900 mm wide cassette brass sockets flush in place with marble images screwed polished finish and stainless steel rose wood moulded door frame engraving weight approved colour pattern approved colour 1 1/2 No pair Purpose made hinges to be hinged weight 1 1/2 No pair Purpose made hinges to be hinged weight Escutcheon plate metal Nolues 180 cylinder 50 mm diameter temporary door furniture (Eslicetal Nolues E-S 6)7 1 No door closer stop (Eslicetal Nolues E-S 6)7

Qty 17 no

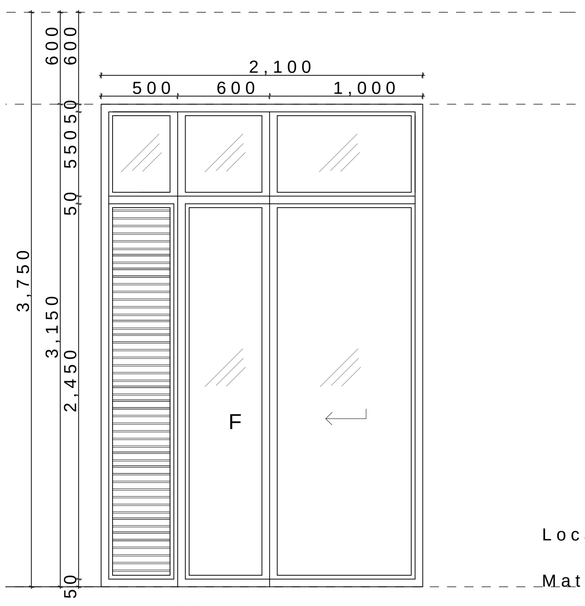

D20 C[3]20

Location Prestaurant Exact cutoff Hostel rooms

Material 12 mm thick textured rough glass as a 75x75 mm aluminium powder coated effect metal frame, with side leaves made in aluminium with the same finish
Sliding door

Qty 19 no

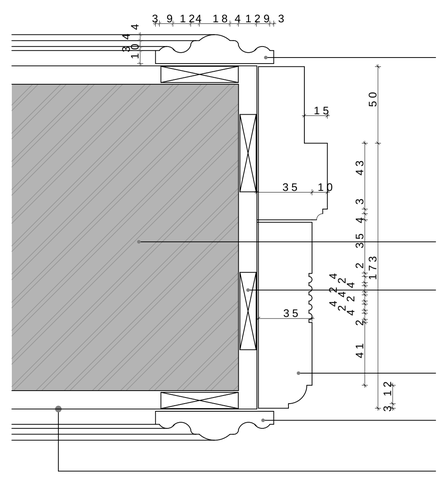

A(3)201
SCALE 1:20

JAMB DETAIL

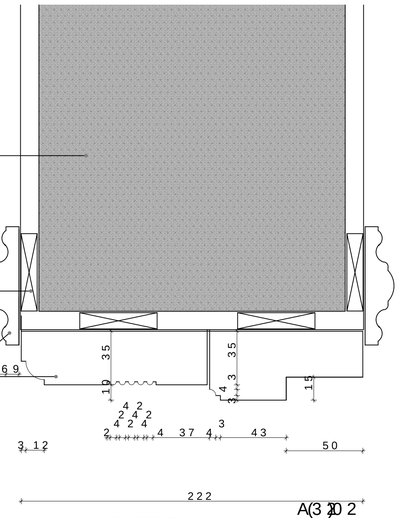

HEAD DETAIL

A(3)202
SCALE 1:20

NOTES
GENERAL
1. Drawings not to scale. Only figured dimensions to be used
2. All dimensions are shown in millimeters unless otherwise stated
3. P.V. denotes pressure vessel
CIVIL WORKS
1. All slabs to be poured on top of 100 gauge polythene sheet over blinding
5 67 mm concrete recent 61 0 mm hard core compacted gravel base
2. All joints shall be treated to create a better movement control
3. All joints such as bark mode estate stability The design load shall not exceed natural ground pressure
STRUCTURAL WORKS
1. Depending on ground condition refer to geotechnical report to S.E's approval
2. For all Concrete grade refer to reinforcement schedule Structural Engineer details
3. All dimensions Concrete grade refer to reinforcement schedule unless otherwise specified with structural approval have every course
4. All walls less than 200 mm thick to be reinforced with hoop iron have every alternate course
MECHANICAL
1. All plumbing materials to be approved by the Municipal Authority specification
2. All service ducts to be accessible for blockage floors
3. SVP's are not visible in public areas and the rear additional drainage
4. Drainage stones generally found in diameter salt water pipes encased 150 mm concrete surround
5. All underground water pipes are laid 450 mm below ground level pipe
6. Minimum supply pressure 1%
7. All the chamber locations to be coordinated with electrical layout floor sets clarified before work begins
ELECTRICAL
1. All conduits shall be fixed prior to plastering

FINISHES SCHEDULE
1. FLOOR FINISHES
a. 200 mm thick screed reinforced with 75 mm thick hard stone aggregate laid
to falls with brilliant finish
b. 6 mm thick polished terrazzo tiles in mortar screed 50 mm thick, with
250 mm individual tiles to be approved by architect approval
Total floor slab thickness 200 mm
c. 400 mm x 200 mm x 30 mm granite tiles set in mortar screed
Total floor slab thickness 200 mm
d. 300 x 300 x 100 mm thick glass ceramic tiles
e. Approx 200 x 100 x 50 mm thick granite tiles to be fixed approved bed in cement with the joints 2 mm wide in 1:4 limestone screed
f. 20 mm thick and 100 mm wide strips of stone in mortar screed
g. 40 mm screed on finish
2. WALL FINISHES
a. 12 mm thick textured cement plaster to be with texture finish mix tu
Coat applied manufacturer specifications
b. Moulded cornice gypsum available powder stucco well 110 mm from finished level
c. Exposed concrete stone
d. 300 mm x 300 mm x 200 mm thick glass ceramic tiles 200 mm wide with 100 mm straight cut in joints joints shall be direct fixing with the sponge rendered background without painting approval
e. Coral impala soft texture finish maintaining original (2 coats)
f. Emulsion paint
g. Moulded cornice gypsum available 120 mm high
3. SKIRTING FINISHES
a. 300 mm x 100 mm thick ceramic tiles
b. 100 mm wide mortar bed 25 mm thick in mortar screed
c. 150 mm high polished finish texture terrazzo
d. ex 150 mm x 25 mm thick wooden skirting moaviken wall
e. 100 mm x 25 mm wide resin sealed stone tiles
f. Rando cover and stick mat zes tassines
4. CEILING FINISH
a. 9 mm thick soffit finish ceiling board 20 mm set accommodation impala ster smooth to be fixed the structural wall
b. Painting weather proof grade finish finish
c. Mahogany moulding
d. Emulsion paint
e. 25 mm thick suspended ceiling board plasterboard soffit
f. Squared timber (top) plank ceiling board plasterboard fill

REVISIONS

LEGEND
FLOOR FINISH
WALL FINISH
SKIRTING FINISH
CEILING FINISH
WINDOW W-01 — FLOOR LEVEL, WINDOW TYPE
ROOM 008 — FLOOR LEVEL, ROOM NUMBER
DOOR D-01 — FLOOR LEVEL, DOOR TYPE

PROJECT TITLE: PROPOSED MAGISTRATE COURT SERVICE TERMINAL INFORMATION CENTRE
JOB NUMBER: P/0406/2016
DRAWING TITLE: DOOR SCHEDULES
DRAWING NO: C(-)01
DRAWN BY: KAMAU NJUGUNA NJIKU
DATE: 7TH MARCH 2016
DRAWING STATUS: FOR WORKING DRAWINGS
PAPER SIZE: A1
SCALE: 1:100
SHEET NO: 1

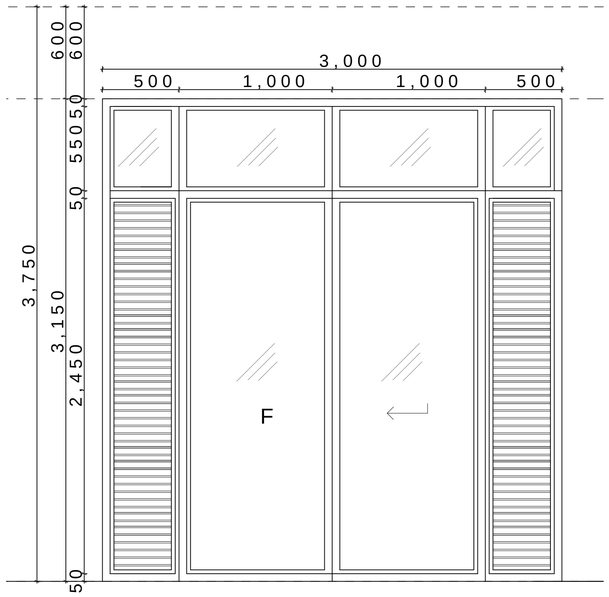

D11 C[3]11

Location: Hotel lobby main lobby, visitors

Material: 12mm thick textured toughened glass
750x750mm aluminium pivot door, textured effect to match frame, with side louvers and aluminium with the same finish
Sliding door

Qty: 14no

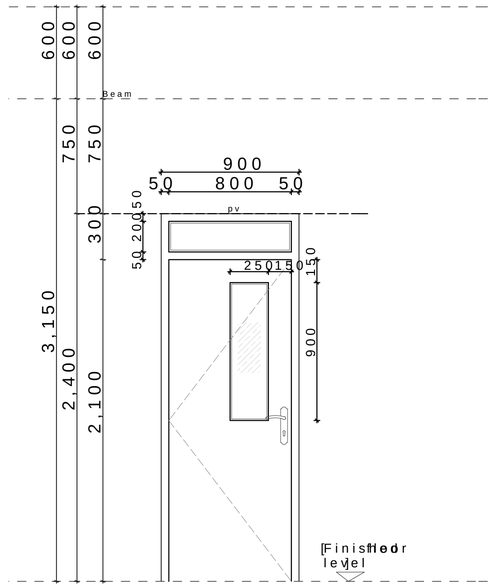

D12 C[3]12

Location: Kitchen

Material: Semi solid hardwood veneered flush door to BS 4787 with lipped edges, solid block kiln dried hardwood, 1050x750mm thick, with frame & architraves, internally c/w vision panel

Qty: 10no

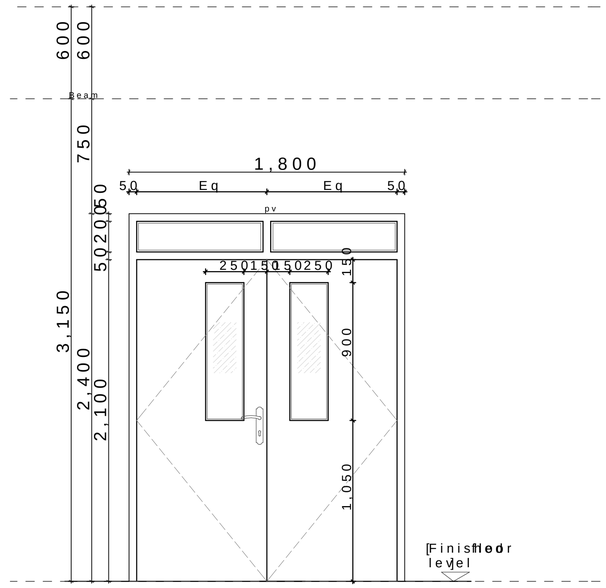

D13 C[3]13

Location: Kitchen

Material: Semi solid hardwood veneered flush door to BS 4787 with lipped edges, solid block kiln dried hardwood, 1050x750mm thick, with frame & architraves, internally c/w vision panel

Qty: 1no

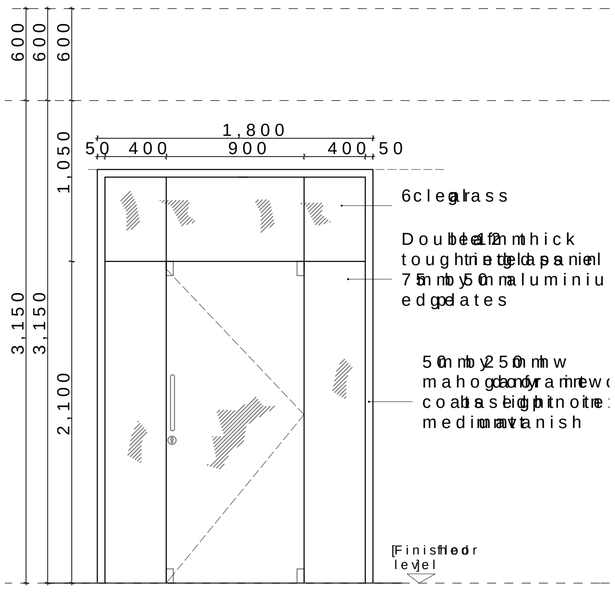

D14 C[3]14

Location: Banking hall to entrance to office suites entrances

Material: 12mm double leaf toughened tempered glass panel door

Qty: 10no

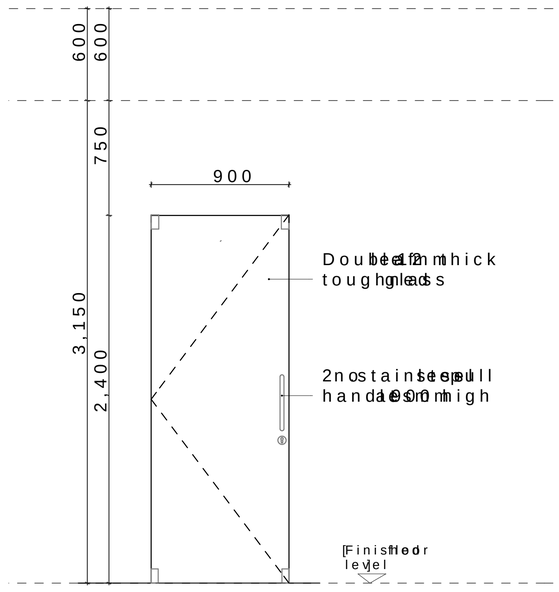

D15 C[3]15

Location: Interior of lift spaces

Material: 12mm toughened tinted glass with 100mm x 50mm stainless steel edge plates

Qty: 10no

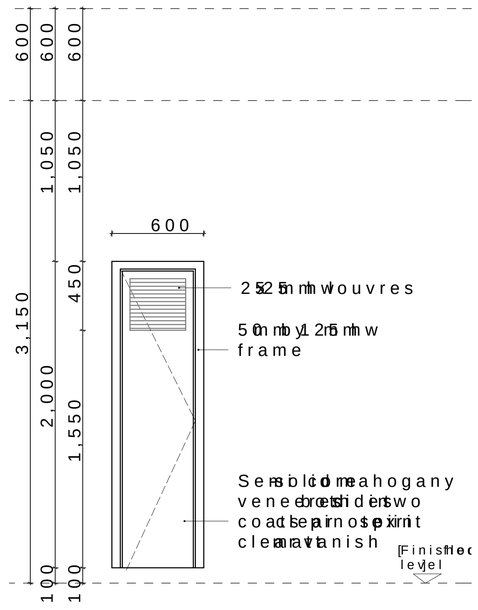

D17 C[3]17

Location: All educational floors

Material: Semi solid core flush door mahogany veneered both sides

Qty: 38no

NOTES

GENERAL

1. Drawings not to scale. Only figured dimensions to be used
2. All dimensions are shown in mm unless otherwise stated
3. P.V. denotes pressure vent

CIVIL WORKS

1. All slabs at ground level to be poured on 100gauge polythene sheet on 50/75mm concrete screed over 100mm hardcore (compacted gravel base)
2. All openings, deflections to be treated for termite control
3. All openings, cracks, bark, moisture stability. These openings unless exceed natural ground level

STRUCTURAL WORKS

1. Depth of foundation and dimensions to be determined by KENGEN's approval
2. Foundation, Coring, grade beams to be over-reinforced as per Structural Engineer details
3. All adjacent Concrete, grade beams to be over-reinforced as may be specified with structural approval, have very course
4. All walls less than 200mm thick to be reinforced with hoop iron have very alternate course

MECHANICAL

1. All plumbing and drainage to be approved by the Local Authority specification
2. All services ducts to be accessible for blockage floors
3. SVP's to be visible, printed be provided at the base and drainage
4. Drainage passes through, generally in diameter, walk way, where cast iron 450mm concrete surround
5. All underground waste drainage pipes be class 4 gold terrace pipe
6. Minimum slope 1:40 gradient 2.5%
7. All mechanical work to be coordinated with electrical work on floor sets clarified before work begins

ELECTRICAL

1. All conduits to be laid before plastering

FINISHES SCHEDULE

1. FLOOR FINISHES

a. 200mm thick concrete screed to BS 8500 details as well with hardness reader laid
total thickness 65mm
b. 6mm thick polished terrazzo tiles on mortar screed, 50mm thick, with 25mm individual tiles, respect to architect approval
Total floor slab thickness 265mm
c. 40mm x 200mm x 300mm granite tiles 14mm on mortar screed
Total floor slab thickness 265mm
d. 300x300x10mm thick glazed ceramic tiles
e. Approx 200x150mm mahogany, tulipwood, oak, with the screed 14mm screed
f. 20mm thick cement screed on mortar screed
g. 40mm screed on concrete finish

2. WALL FINISHES

a. 12mm thick cement plaster, textured with water proofing mixture
Coat applied manufacturer specifications
b. Moulded skirting, grain by rail 100mm high finished level
c. Exposed concrete surface
d. 300mm x 300mm x 20mm thick glazed ceramic tiles 200mm high with 100mm straight joints, joints to be rectified, with the sponge dried background without painting approval
e. Coral impala stone, containing grit (2 to 3 coats)
f. Emulsion paint
g. Moulded skirting, grain by rail 100mm high

3. SKIRTING FINISHES

a. 300mm x 300mm thick ceramic tiles
b. 100mm limestone or 25mm thick limestone screed
c. 150mm high polished terrazzo
d. exterior 150mm x 25mm thick, hanging on exterior wall
e. 100mm x 25mm mortar screed stations
f. Random cut stack bond glass

4. CEILING FINISH

a. 9mm fire board, 14mm screed 30mm screed on impala stone smooth to the structural
b. Paint weather proof finish
c. Mahogany T&G
d. Emulsion paint
e. 25mm thick lusper gypsum board plaster board soffit
f. Square edge (tongue) plank ceiling with lime fill

REVISIONS

LEGEND

FLOOR FINISH
WALL FINISH
SKIRTING FINISH
CEILING FINISH

WINDOW W-01 — FLOOR LEVEL, WINDOW TYPE
ROOM 01.08 — FLOOR LEVEL, ROOM NUMBER
DOOR D-01 — FLOOR LEVEL, DOOR TYPE

PROJECT TITLE	PROPOSED MIXED USE COURT SERVICE TERMINAL INFORMATION CENTRE
JOB NUMBER	P/0406/2016
DRAWING TITLE	DOOR SCHEDULES
DRAWING NO.	C(-)03
DRAWN BY	KAMAU NJUGUNA WANJIKU
DATE	7TH MARCH 2016
DRAWING STATUS	REWORK DRAWINGS
PAPER SIZE	A1
SCALE	1:100
SHEET NO.	1